Western Bay of Plenty District Council

Mā tō tātou takiwā

For our District

Katikati Community Board

Poari Hapori

K22-2
Wednesday, 30 March 2022, 7.00pm
Via Zoom
https://westernbay-govt-nz.zoom.us/j/83670621849

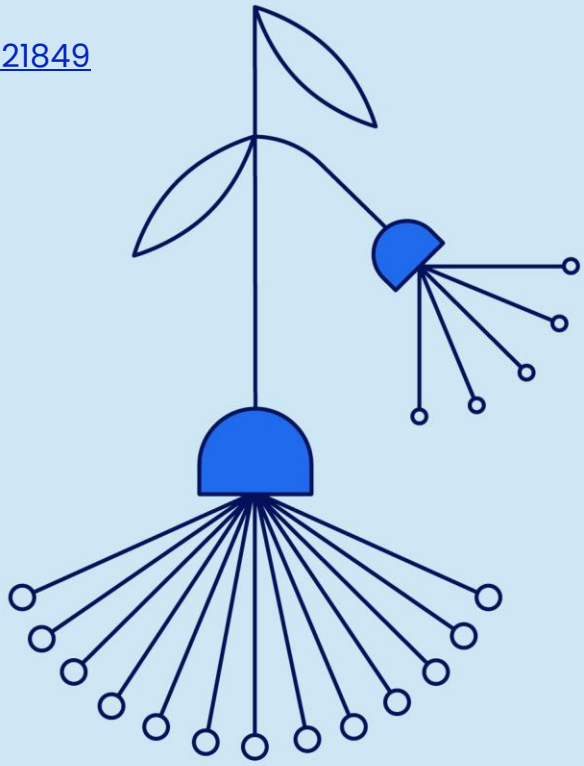

Katikati Community Board

Membership:

Chairperson	Ben Warren
Deputy Chairperson	Neil Harray
Members	John Clements Kate Sutherland Cr James Denyer Cr Allan Sole
Quorum	3
Frequency	Eight weekly / Workshops as required

Role and Purpose of Community Boards:

- To represent, and act as an advocate for, the interests of their communities.
- To provide an effective mechanism for community feedback to Council.
- To consider and report on all matters referred by Council and its Committees, or any matter of interest or concern to the Community Board.
- To maintain an overview of services provided by Council within the community.
- To prepare an annual submission to Council for expenditure within the community.
- To communicate with community organisations and special interest groups within the community.
- To undertake responsibilities as delegated by Council or its Committees.

Delegated Functions:

Subject to compliance with Council strategies, policies, plans and legislation:

- To maintain an overview of road works, water supply, sewage, stormwater, parks, recreational facilities, community activities and traffic management within the community and make recommendations to Council and its Committees in accordance with their delegated functions.
- To report and make recommendations to Council and its Committees in accordance with their delegated functions on issues facing the respective communities to promote public participation and communication within respective communities.
- To undertake tasks, powers and functions delegated by Council or its Committees in accordance with their delegated functions from time to time.
- To control, expend and monitor funds as allocated by Council.
- To allocate Community Board reserve funds to specific capital non-recurring projects for council assets on council land, or in accordance with allocations which have been approved through the annual plan process.

- To receive reports from Council appointees on Council matters relevant to the Community Board.

1. To have input into Council and its Committees on issues and plans that affect communities within the Community Board area.

Notice is hereby given that a Katikati Community Board Meeting will be held via Zoom on: Wednesday, 30 March 2022 at 7.00pm

Order Of Business

1 Present 5

2 In Attendance 5

3 Apologies 5

4 Consideration of Late Items 5

5 Declarations of Interest 5

6 Public Excluded Items 5

7 Public Forum 5

8 Minutes for Confirmation 6

8.1 Minutes of the Katikati Community Board Meeting held on 2 February 2022 6

9 Reports 16

9.1 Katikati Community Board Chairpersons Report - March 2022 16

9.2 Katikati Community Board Councillor's Report 25

9.3 Katikati Community Board Grant Application 28

9.4 Infrastructure Services Report Katikati Community Board March 2022 30

9.5 Katikati Financial Report - February 2022 44

9.6 Council, Standing Committees and Community Board Meetings 47

1 PRESENT

2 IN ATTENDANCE

3 APOLOGIES

4 CONSIDERATION OF LATE ITEMS

5 DECLARATIONS OF INTEREST

Members are reminded of the need to be vigilant and to stand aside from decision making when a conflict arises between their role as an elected representative and any private or other external interest that they may have.

6 PUBLIC EXCLUDED ITEMS

7 PUBLIC FORUM

A period of up to 30 minutes is set aside for a public forum. Members of the public may attend to address the Board for up to five minutes on items that fall within the delegations of the Board provided the matters are not subject to legal proceedings, or to a process providing for the hearing of submissions. Speakers may be questioned through the Chairperson by members, but questions must be confined to obtaining information or clarification on matters raised by the speaker. The Chairperson has discretion in regard to time extensions.

Such presentations do not form part of the formal business of the meeting, a brief record will be kept of matters raised during any public forum section of the meeting with matters for action to be referred through the customer contact centre request system, while those requiring further investigation will be referred to the Chief Executive.

8 MINUTES FOR CONFIRMATION

8.1 MINUTES OF THE KATIKATI COMMUNITY BOARD MEETING HELD ON 2 FEBRUARY 2022

File Number: A4510342

Author: Pernille Osborne, Senior Governance Advisor - Community Boards

Authoriser: Barbara Whitton, Customer Services and Governance Manager

RECOMMENDATION

That the Minutes of the Katikati Community Board Meeting held on 2 February 2022, as circulated with the agenda, be confirmed as a true and correct record.

ATTACHMENTS

1. Minutes of the Katikati Community Board Meeting held on 2 February 2022

MINUTES OF WESTERN BAY OF PLENTY DISTRICT COUNCIL
KATIKATI COMMUNITY BOARD MEETING NO. K22-1
HELD VIA ZOOM (AUDIO/VISUAL LINK) ONLY
UNDER COVID-19 PROTECTION FRAMEWORK - RED
ON WEDNESDAY, 2 FEBRUARY 2022 AT 7.00PM

1 PRESENT VIA ZOOM

Chairperson B Warren (Chairperson), Member N Harray, Member J Clements, Member K Sutherland, Cr J Denyer and Cr A Sole

2 IN ATTENDANCE VIA ZOOM

J Holyoake (Chief Executive Officer), P Osborne (Senior Governance Advisor) and J Osborne (Governance Support Administrator)

OTHER ATTENDEES VIA ZOOM

6 Members of the public, including Councillor Anne Henry

3 APOLOGIES

Nil

4 CONSIDERATION OF LATE ITEMS

Nil

5 DECLARATIONS OF INTEREST

Members were advised that if they had an interest (actual, potential, pecuniary or no pecuniary interest) in any item on the agenda, then they must declare this interest and refrain from discussing or voting on this item and they were advised to withdraw from the meeting table for the item. [As per the Local Authorities (Member's Interest) Act 1968].

- Councillor Denyer advised that he had a declaration of interest regarding report number 9.6 of the Agenda, 'Katikati Community Board Grant Application'.
- Member Harray advised that he had a declaration of interest regarding report number 9.6 of the Agenda, 'Katikati Community Board Grant Application'.

6 PUBLIC EXCLUDED ITEMS

Nil

Unconfirmed

7 PUBLIC FORUM

The Chairperson outlined the protocols relating to the Public Forum section of the meeting as set out in the Standing Orders for the Katikati Community Board. Attending members of the public were invited to take part in the public forum.

7.1 KEITH HAY - THREE WATERS REFORM

Mr Hay was in attendance to express his concerns to the Board, as he was of the belief that Councillor Denyer did not vote in the best interests of the community at the Council meeting held 16 December 2021 in regards to item 8.1 Notice of Motion – Councillor Grainger – Three Waters Proposal.

7.2 EWEN LUSKIE - THREE WATERS REFORM

Mr Luskie was in attendance to express his concerns to the Board, as he was of the belief that there had been no consultation regarding the Three Waters Reform. Mr Luskie also understood that Councillor Denyer had voted for the Three Waters Reform.

Councillor Denyer made the below points of clarification:

- At the Council meeting held 16 December 2021 he did not vote for the Three Waters Reform;
- During the debate at the meeting Councillor Denyer expressed his view that the reform proposal could be a lot better; and
- He was of the belief that the Mayor, representing the District, as part of the working group mandated by the Government, would have a greater chance of success improving the reform than a group of Councillors attempting to do so from the outside.

7.3 PAUL O'NEIL - KATIKATI COMMUNITY PLAN

Mr O'Neil was in attendance to speak on behalf of Katikati Taiao, noting that they had prepared a submission on the draft Community Plan, and were waiting for an invitation for further community input.

Mr O'Neil sought clarification over what stage the Community Plan was at, as he felt there was conflicting messaging in the Chairpersons Report, and the Community Plan itself.

The Chairperson noted there were still changes that needed to be made, prior to the Community Plan being presented to the community, and encouraged Mr O'Neil to forward the proposal to the Board. If the Board needed clarification on any aspect of the proposal, they would invite him to an upcoming workshop.

Unconfirmed

7.4 PAULA GAELIC – WESTERN BAY MUSEUM

Ms Gaelic was in attendance to provide the Board with an update regarding the Western Bay Museum, noting the below points:

- Curator Rosemary Deane started on Tuesday 1 February 2022, which would be a huge benefit to the museum; and
- When COVID-19 restrictions lifted, she would like to present the Museum Development Plan to the Community Board.

8 MINUTES FOR CONFIRMATION

8.1 MINUTES OF THE KATIKATI COMMUNITY BOARD MEETING HELD ON 10 NOVEMBER 2021

RESOLUTION K22-1.1

Moved: Cr J Denyer
Seconded: Member N Harray

That the Minutes of the Katikati Community Board Meeting held on 10 November 2021, as circulated with the agenda, be confirmed as a true and accurate record.

CARRIED

9 REPORTS

9.1 COUNCIL DECISION ON KATIKATI COMMUNITY BOARD RECOMMENDATION - 33 MIDDLEBROOK DRIVE

The Board considered a report from the Senior Governance Advisor. The report was taken as read, with further clarification sought on the below items:

- Whether or not the immediate neighbours to 33 Middlebrook Drive had been consulted with.
- Whether or not the immediate neighbours to the Housing New Zealand development on Middlebrook Drive had been informed of the social housing and affordable housing that would occupy that land.

The Chief Executive Officer responded to questions as follows:

- Staff would follow up to ensure that consultation with appropriate neighbours of 33 Middlebrook Drive was undertaken, if it had not already happened.
- Housing New Zealand, as owner of the land, would be responsible for consulting with immediate neighbours.

Unconfirmed

The Board expressed concern over the possibility of the Housing New Zealand development being social housing, as opposed to affordable housing. If the housing was going to be social housing, the Board expressed strongly that there should be community consultation.

The Board requested a report from Council regarding the consultation process for current community developments within Katikati.

RESOLUTION K22-1.2

Moved: Chairperson B Warren
Seconded: Member N Harray

That the Senior Governance Advisor's report dated 2 February 2022, titled 'Council decision on Katikati Community Board Recommendation – 33 Middlebrook Drive', be received.

CARRIED

9.2 COUNCIL DECISION ON KATIKATI COMMUNITY BOARD RECOMMENDATION - REQUEST TO ENDORSE "KATIKATI MURAL TOWN - AVOCADO CAPITAL OF NEW ZEALAND"

The Board considered a report from the Senior Governance Advisor. The report was taken as read.

RESOLUTION K22-1.3

Moved: Member J Clements
Seconded: Cr A Sole

That the Senior Governance Advisor's report dated 2 February 2022, titled 'Council Decision on Katikati Community Board Recommendation – Request to endorse "Katikati Mural Town – Avocado Capital of New Zealand"', be received.

CARRIED

9.3 KATIKATI COMMUNITY BOARD CHAIRPERSONS REPORT - FEBRUARY 2022

The Board considered a report from the Chairperson. The report was taken as read.

Unconfirmed

The Chairperson reiterated the success of the Avocado Festival, with special mention to Pauline McFadden, Kylie Watkin, and Jacqui Knight for all their work put into the festival.

RESOLUTION K22-1.4

Moved: Chairperson B Warren
Seconded: Member J Clements

That the Chairperson's report dated 2 February 2022, titled 'Katikati Community Board Chairpersons Report – February 2022', be received.

CARRIED

9.4 KATIKATI COMMUNITY BOARD COUNCILLORS REPORT - FEBRUARY 2022

The Board considered a report from Councillor Sole, who provided the Board with a brief outline of each listed item.

The Board sought clarification around the Tourism Bay of Plenty (TBOP) Letter of Expectation. It was noted that Council included a focus on walking and cycling, and training and upskilling tourism providers, in their Letter of Expectation.

The Board also highlighted the benefit of TBOP promoting events happening in Katikati.

The Board was informed that Councillor Sole and Councillor Denyer did not mention the Katikati Community Boards resolution during the discussion at the Council meeting held 16 December 2021, regarding the Three Waters Reform.

RESOLUTION K22-1.5

Moved: Chairperson B Warren
Seconded: Cr J Denyer

That the Councillor's report dated 2 February 2022, titled 'Katikati Community Board Councillors Report – February 2022', be received.

CARRIED

9.5 KATIKATI COMMUNITY BOARD - ANZAC DAY COMMEMORATION 2022

The Board considered a report from the Senior Governance Advisor. The report was taken as read with discussion around representation on ANZAC Day 2022.

Unconfirmed

RESOLUTION K22-1.6

Moved: Chairperson B Warren
Seconded: Member N Harray

1. That the Senior Governance Advisor's report dated 2 February 2022, titled 'Katikati Community Board – ANZAC Day Commemoration 2022', be received.
2. That the report relates to an issue that is considered to be of low significance in terms of Council's Significance and Engagement Policy.
3. That the Katikati Community Board provide a wreath for the ANZAC Day Service, to be paid from the Katikati Community Board Contingency Account (up to the value of $200).
4. That Chairperson Ben Warren represent Katikati Community Board at the ANZAC Day Service in Katikati on 25 April 2022.

CARRIED

9.6 KATIKATI COMMUNITY BOARD GRANT APPLICATION

Councillor Denyer and Member Harray declared an interest in this interest in this item, withdrew from the meeting and took no part in the discussion or voting thereon.

The Board considered a report from the Senior Governance Advisor. The report was taken as read.

RESOLUTION K22-1.7

Moved: Cr A Sole
Seconded: Member K Sutherland

1. That the Senior Governance Advisor's report dated 2 February 2022, titled 'Katikati Community Board Grant Application', be received.
2. That the Katikati Community Board approve the Grant Application from Road Safety Education for $2,000 to contribute to costs relating to the delivery of the safety education programme to 100 Katikati College Year 12 students. This grant will be funded from the Katikati Community Board Grants Account, subject to all accountabilities being met.

CARRIED

Unconfirmed

9.7 INFRASTRUCTURE SERVICES REPORT KATIKATI COMMUNITY BOARD FEBRUARY 2022

The Board considered a report from the Deputy Chief Executive. The report was taken as read with further discussion on the below.

RESOLUTION K22-1.8

Moved: Chairperson B Warren
Seconded: Member K Sutherland

1. That the Deputy Chief Executive's report dated 2 February 2022, titled' Infrastructure Services Report Katikati Community Board February 2022', be received.

CARRIED

9.7.1 HYDE STREET RE-SEAL

Councillor Denyer advised the Board that, following a walk down Hyde Street, he wished to pass a formal resolution for the Board to fund the sealing of the only unsealed section of road in urban Katikati. Some members of the Board felt this was something they would like to discuss further at an upcoming workshop, to ensure that they considered all priorities before committing the remaining funds in the Roading Account. The Board was awaiting a priority list from the Roading Engineer (West) to review at a workshop.

The Board was advised that, if they held this decision over to the next meeting, it would be unlikely to progress before the end of the triennium.

RECOMMENDATION

MOTION
Councillor Denyer put the following motion:

Moved: Cr Denyer
Seconded: Cr Sole

That the Katikati Community Board fund the sealing of the formed section of Hyde Street in Katikati from the Roading Account.

The vote was as follows: 3 for the motion and 3 against the motion. The Chairperson then exercised his casting vote.
The motion was declared **lost** on the casting vote.

Unconfirmed

9.7.2 RESERVE MANAGEMENT PLAN

RECOMMENDATION

The Board requested a report on the Levels of Service for the parks and reserves within Katikati.

The Board was reminded about the importance of raising Service Requests (CCR's) if they saw an area that was in need of some attention.

9.8 FINANCIAL REPORT KATIKATI - DECEMBER 2021

The Board considered a report from the Financial Business Advisor. The report was taken as read.

RESOLUTION K22-1.9

Moved: Chairperson B Warren
Seconded: Cr A Sole

That the Financial Business Advisor's report dated 2 February 2022, titled 'Financial Report Katikati – December 2021', be received.

CARRIED

9.9 COUNCIL, STANDING COMMITTEES AND COMMUNITY BOARD MEETINGS

The Board considered a report from the Senior Governance Advisor. The report was taken as read.

RESOLUTION K22-1.10

Moved: Chairperson B Warren
Seconded: Cr J Denyer

That the schedule of meetings for February, March and April 2022, be received.

CARRIED

Prior to closing the meeting, the Chairperson reminded those present that grant applications were encouraged to be presented to the Board at the next meeting, prior to the end of the financial year. It was also noted that the Board had the C.E Miller fund that could be used for beautification projects around Katikati.

Unconfirmed

The Meeting closed at 8.24pm.

The minutes of this meeting were confirmed as a true and correct record at the Katikati Community Board meeting held on Wednesday 30 March 2022.

.....

Chairperson B Warren

CHAIRPERSON

Unconfirmed

9 REPORTS

9.1 KATIKATI COMMUNITY BOARD CHAIRPERSONS REPORT - MARCH 2022

File Number: A4508534

Author: Ben Warren, Community Board Chairperson

Authoriser: John Holyoake, Chief Executive Officer

RECOMMENDATION

That the Chairperson's report dated 30 March 2022, titled 'Katikati Community Board Chairpersons Report – March 2022', be received.

BACKGROUND

Talking Points

- Community and Town Centre Plan updates
- Moore Park and Beach Road Developments
- Social Housing development
- Bird Walk erosion
- Graffiti around town
- Tetley Road
    - Tetley Road housing development – are pavements to Marshall Road part of this development?

      Staff Comment:
      The shared path that is going in on Tetley Road is not being funded by the developer directly, but they are being charged Financial Contributions (FinCos).
    - Tetley Road roundabout is making solid progress. Are there plans to upgrade Tetley Road in anticipation of increased traffic due to improved SH2 access and current and future housing developments along Tetley Road.

      Staff Comment:
      There are plans to up grade Tetley Road in the next few years. It is subject to a rehab this coming season.

- C.E Miller Fund Request – **Attachment 1**

ATTACHMENTS

1. **Attachment 1 - C.E. Miller Funds Request from Katikati Cricket Club**

Katikati Community Board

Katikati Cricket Club Inc

14 March 2022

Ref: Application for Funding from C.E. Miller Bequest for beautification of Moore Park.

Dear Katikati Community Board,

The Katikati Cricket Club on behalf of the users of Moore Park are writing to request funds from the C.E. Miller Bequest for the beautification of the new sports field area of Moore Park.

We would like to invest in planting trees on the four corners of the new oval which will enhance a park like setting and be similar to the lovely established trees at the other end of Moore Park near Hansen place. We would also like to install two permanent public bench seats for the park. Both seats would be Memorial seats with one designated and recognising the benefactor C.E. Miller and the other dedicated to a person who contributed considerably to the local community. The seats are made from recycled plastic, environmentally friendly and cost between $800 and $1900 + gst each.

The park is well used by walkers and recreation users. Trees providing shade and seating will be a simple and welcome enhancement to this wonderful area. The clubs utilising the area envisage it to become very much a village green like area that will be enjoyed more and more.

The Club would like to apply for $5000.00 from the CJ Miller fund to allow this project to go ahead. Please see quotes for the seats attached. Tree prices vary from the size, age and the amount selected; the sporting groups are able to make up any shortfall on this project should this occur.

Kind regards

Phillip Magnussen
KKCC Secretary
021711195

Pernille Osborne

From: Ben Warren
Sent: Wednesday, 16 March 2022 9:06 am
To: Pernille Osborne
Subject: Fwd: REPLAS ENQUIRY - NZ - Deal# 1323. Quote for C.E.Miller request

Date: 16 March 2022 at 9:02:04 AM NZDT
To: Ben Warren <Ben.Warren@westernbay.govt.nz>
Subject: Fwd: REPLAS ENQUIRY - NZ - Deal# 1323

Hi Philip

We're the manufacturers and distributors for Replas NZ within the country. As such, we'd be more than happy to assist with estimating this job for you. The prices for both the Daintree and the Kingfisher Benches are supplied below, excluding GST and delivery costs.

Daintree Seats		
Daintree Seat - 1.8m with 2 supports, free standing	62kg	$1,157.60
Daintree Seat - 1.8m with 3 supports, free standing	62kg	$998.70
Daintree Seat - 3.6m with 3 supports, free standing	125kg	$2,178.30
Daintree Seat - 3.6m with 5 supports, free standing	125kg	$1,917.20
Arm-rest Daintree, x2 - Plastic - Black (Custom colours available)	1.2kg	$98.00
Arm-rest Daintree, x2 - Metal - Black (Custom colours available)	6kg	$221.50

Kingfisher Seats		
Kingfisher Seat - 1.8m with Kimberley supports, free standing	67kg	$1,004.20
Kingfisher Seat - 1.8m with Kimberley supports, free standing	67kg	$1,004.20
Kingfisher Seat - 1.8m with Daintree supports, free standing	67kg	$1,004.20

Kingfisher Bench, 2 Supports		
Kingfisher Bench 1.8m, 2 supports - 6 x 40 mm x 40 mm slats, free standing	68kg	$691.60
Kingfisher Bench 1.8m, 2 supports - 6 x 40 mm x 40 mm slats, in ground	68kg	$691.60
Kingfisher Bench 1.8m, 2 supports - 11 x 40 mm x 40 mm slats, free standing	68kg	$943.40
Kingfisher Bench 1.8m, 2 supports - 11 x 40 mm x 40 mm slats, in ground	68kg	$943.40

Kingfisher Bench, 3 Supports		
Kingfisher Bench 1.8m, 3 supports - 6 x 40 mm x 40 mm slats, free standing	68kg	$511.40
Kingfisher Bench 1.8m, 3 supports - 6 x 40 mm x 40 mm slats, in ground	68kg	$511.40

Kingfisher Bench 1.8m, 3 supports - 11 x 40 mm x 40 mm slats, free standing	68kg	$797.50
Kingfisher Bench 1.8m, 3 supports - 11 x 40 mm x 40 mm slats, in ground	68kg	$797.50

If there's anything else you need, you can contact us through this email address. We're open to any further enquiries you may have.

Kind regards,

Lochlain McDonald
Business Support for Metal Art Ltd.

Phone: 64+ 4 939 6666
Email: info@metalart.co.nz

53 Port Road, Seaview, Lower Hutt 5010

www.metalart.co.nz

Metal Art Ltd
TRADITIONAL VALUES, MODERN SOLUTIONS

The content of this email is confidential and intended for the recipient specified in message only. It is strictly forbidden to share any part of this message with any third party, without a written consent of the sender. If you received this message by mistake, please reply to this message and follow with its deletion, so that we can ensure such a mistake does not occur in the future.

CUSTOMER QUOTE

CQUO12552

Date: 14/03/2022
Customer No: KATIKATICLUB
Consultant: Jo Oli
Quote Expires: 12/06/2022

Urban Effects Ltd
PO Box 14
230 Guyton Street
Wanganui, 4500

Freephone : 0508 487 226
Phone : 06 348 0511
Fax : 06 348 9355
GST: 107 646 582
sales@urbaneffects.co.nz
http://www.urbaneffects.co.nz

Quote For

Katikati Cricket Club Est 1878
Katikati
Bay of Plenty

Attn: Ben Warren
RE: Seating

Description	Quantity	Unit Price	Total
Citistyle Timber Seat, Hardwood, 1,8m length, Surface mount, Complete	1.00	1,973.00	1,973.00
Atessa Park Seat Flange Mount 1.8m Timber	1.00	2,201.00	2,201.00
Kingsgrove Seat, Hardwood, 1.8m length, Inground mount, Complete	1.00	2,352.00	2,352.00

Note - Tannin Leaching: Most Hardwoods used in the manufacture are prone to tannin leaching when installed outside.
The Leaching period can last for up to 8 weeks (depending on weather). Please be aware that the residue may stain concrete or paved surfaces initially, but staining will gradually fade.

This quotation is valid for 90 days from the date of issue unless otherwise advised.
40% progress claim required with Order Confirmation.

Supply only. Some assembly required.
All prices Excluding GST.

Freight & Packaging prices (excl. GST):

Total order up to $2999 - add 10%
Orders between $3000-$7499 - add 5%
Total order over $7500 - add 2.5%

**Large and overweight deliveries WE WOULD RECOMMEND HIAB DELIVERY(surcharge fee $320) for Health and Safety protocols.

Subject to Urban Effects standard terms & conditions.
Any contractor specific terms & conditions may incur additional charges.

Seats

Citistyle Timber Seat

The contemporary, slimline design of the *Citistyle* seating range is also available in a hardwood bench and table setting.

Customisation available

Part of a range

Lifetime Structural Warranty

Quality & durability

- Hardwood Timber Slats
- Sleek, durable alloy frames ensure durability
- Subtle curves welcome users with functional comfort
- Surface mount (Inground mount also available)
- Standard size 1.8m length (other sizes available on request)
- Armrests available

Specifications

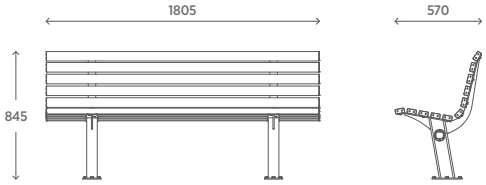

Ideal for

- Metropolitan settings
- Parks
- Shopping centres
- Streetscapes
- Education

Finishes available

- Hardwood Timber slats and frame powdercoated in colour

Other products in the *Citistyle* range

- *Citistyle* Deluxe Seat
- *Citistyle* Deluxe Bench
- *Citistyle* Timber Bench
- *Citistyle* Deluxe Table Setting
- *Citistyle* Timber Table Setting
- *Citistyle* Deluxe Bin
- *Citistyle* Timber Bin
- *Citistyle* Semi Hoop Bike Rack
- *Citistyle* Bollard

To view other products in the *Citistyle* range, visit our website

**A wide range of colours are available to suit your desired colour scheme.*

Contact us today

Freephone **0508 4 URBAN** or visit **urbaneffects.co.nz**

urban effects

Seats

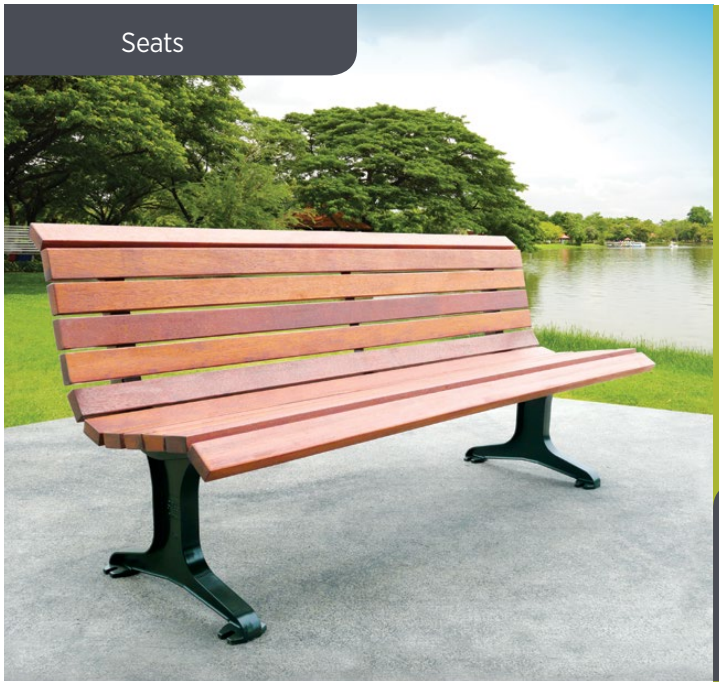

Kingsgrove Seat

The *Kingsgrove* Seat has a classic heritage style due to the cast aluminium frames and curved seat, which along with the optional arm rests, combines to provide great comfort and accessibility.

Customisation available

Part of a range

Environmental credentials

Quality & durability

- Hardwood Timber Slats
- Heavy duty cast aluminium frames
- All fittings HDG and Stainless Steel
- Surface mount
- Standard size 1.8m length
- Armrests Available

Ideal for

- Education
- Parks and Reserves
- Streetscapes
- Sport and recreation clubs

Finishes available

- Powdercoated frames and hardwood timber slats

Specifications

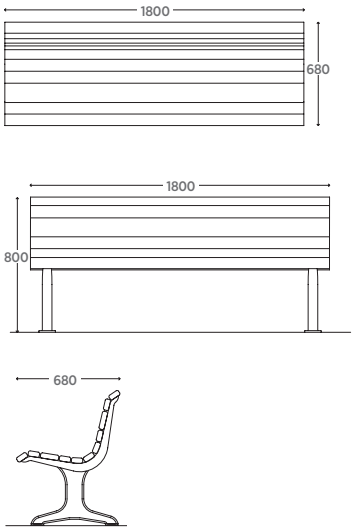

Other products in the *Kingsgrove* range

- *Kingsgrove* Bench

To view other products in the *Kingsgrove* range, visit our website

**A wide range of colours are available to suit your desired colour scheme.*

Contact us today

Freephone **0508 4 URBAN** or visit **urbaneffects.co.nz**

urban effects

Seats

Atessa Seat

Incorporating the celebrated durability features of the *Atessa* Range, this seat's angled and curved design is aimed at delivering user comfort. Alloy extrusions and stainless steel fixings are honed into a stylish and modern statement.

Customisation available

Part of a range

Lifetime Structural Warranty

Quality & durability

- All stainless steel fixings
- Durable alloy frames
- Fully enclosed insect and vermin resistant extrusions
- Anti-skate fixings available
- Anti-vandal die-cast alloy end caps
- Surface, inground and wall mounting
- Standard sizes 1.8m, 3.0m, 6.0m

Ideal for

- Coastal locations
- Any natural or metropolitan setting due to its robustness

Finishes available

- Deluxe – Clear anodised extrusion and frames powder coated in colour*
- Premium – All surfaces powder coated in colour*
- Platinum – Colour anodised extrusion and powder coated frames*
- TimberImage – Multiple natural tones available and powder coated colour frames*
- Timber – Exotic hardwood

**A wide range of colours are available to suit your desired colour scheme.*

Specifications

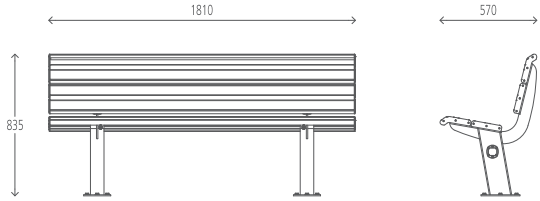

Other products in the *Atessa* range

- *Atessa* Bench
- *Atessa* Double Bench
- *Atessa* Table
- *Atessa* Bin Enclosure (120L)
- *Atessa* Bin Enclosure (240L)
- *Atessa* Bike Rack
- *Atessa* Stainless Steel Bike Rack

To view other products in the *Atessa* range, visit our website

Contact us today

Freephone **0508 4 URBAN** or visit **urbaneffects.co.nz**

urban effects

9.2 KATIKATI COMMUNITY BOARD COUNCILLOR'S REPORT

File Number: A4506615

Author: James Denyer, Councillor

Authoriser: John Holyoake, Chief Executive Officer

RECOMMENDATION

That the Councillor's report dated 30 March 2022, titled 'Katikati Community Board Councillor's Report', be received.

BACKGROUND

Council's Adaptation for Omicron

With Omicron cases increasing exponentially, some of Council's services have been adapted in order to limit the spread amongst staff and to take account of staff needing to self-isolate. This has led to changed opening hours for libraries and recycling centres, and the temporary cessation of kerbside collection of glass and food scraps. All elected member meetings are now entirely via Zoom as well.

Annual Plan

On 8 March, Council adopted its Annual Plan 2022/23 Consultation Document and Supporting Information, as well as the draft Schedule of Fees and Charges and Statement of Proposal for public consultation. There are only minor proposed differences from the Long Term Plan adopted last year, with average rates indicated to increase by 3.96% instead of 3.98%.

The consultation period lasts from 21 March to 21 April. Given the minor nature of the changes, Council is not seeking any specific feedback (other than for a particular rating issue in Pukehina), and no material or significant changes sought through submissions on any other matter can be addressed by Council through the Annual Plan. Any such submissions will be deferred to the Annual Plan 2023/24.

Policies and Bylaws

The Policy Committee has been busy reviewing a number of policies and bylaws. On 10 March, having considered 135 submissions, the committee adopted a new provisional Local Alcohol Policy (LAP) and recommended a revised draft Alcohol Control Bylaw to

Council. The main changes relevant to Katikati were a new section on Club Licences, and a reduction in the maximum hours for off licences, with licensed hours until 9pm instead of 10pm.

Rates relief policies have also been reviewed. This was primarily driven by legislative changes through the Local Government (Rating of Whenua Māori) Amendment Act 2021 requiring changes to Council's Rates Remission on Māori Freehold Land Policy. The revised policy was adopted for consultation alongside the Annual Plan. A further nine rates relief policies that were considered fit for purpose were also adopted for consultation, unchanged.

Last December, the Policy Committee adopted the draft Seal Extension Prioritisation Policy for consultation. As part of this process, Council intends to include Māori Roadways alongside public roads in the prioritisation process. Since all people have the right to use Māori Roadways as if they were public roads (unless the Māori Land Court has ordered otherwise) this was felt to be an equitable approach. This means that the Māori Roadways Policy 2012 has now been proposed to be revoked together with revising the Policy for Council Maintenance of Previously Unmaintained Roads. All these changes will be consulted on alongside the Annual Plan.

Also at the 10 March meeting, the Policy Committee adopted the draft Kerbside Rubbish and Recycling Policy for consultation alongside the Annual Plan. This policy provides guidance for extending the kerbside service to more properties, including to commercial properties. The proposal also allows for households to be provided with additional glass crates.

At the Policy Committee meeting of 8 February, the committee considered the submissions to the draft Waste Management and Minimisation Bylaw. Key changes consulted on include providing greater detail in support of Council's kerbside waste collection service, amendments regarding enforcement, construction and demolition waste, event waste, and multi-unit developments. The Bylaw was recommended to Council for adoption.

Te Kāhui Mana Whenua o Tauranga Moana

It was a pleasure to be able to attend the inaugural meeting of Te Kāhui Mana Whenua o Tauranga Moana on 23 February 2022. This Committee has been established after Te Arawa ki Takutai members disengaged from the Tauranga Moana / Te Arawa ki Takutai Partnership Forum in 2020. The meeting recommended to Council that it adopt Te Toka Tū Moana as the basis for the relationship of Tauranga Moana iwi and hapū with Council.

Some good kōrero was subsequently had in the workshop section of the meeting regarding some of the policy issues described above.

Three Waters Reform Update

On 9 March, the recommendations from the Three Waters Representation, Governance and Accountability Working Group were published. There were 47 recommendations made, including: clarifying Council ownership of the Water Service Entities through an explicit shareholding on behalf of their communities rather than simply a legislated ownership; strengthened safeguards against privatisation; stronger local voice through the establishment of advisory groups (sub-Regional Representative Groups); the creation of an ombudsman for customer enquiries and complaints; and strengthening the role of Te Mana o te Wai, which may be broadly understood as putting the health of the water body first.

It was further clarified that whilst there was affirmation of co-governance, this did not include any iwi/Māori ownership of assets, and that these reforms do not relate to or affect the issues of ownership of water.

Future for Local Government Update

The Future for Local Government reform is progressing. The Review's Panel is currently engaged on a roadshow of councils getting their feedback on the interim report and the Key Shifts that have been signalled: strengthened local democracy; stronger focus on wellbeing, authentic relationship with hapū/iwi/Māori; genuine partnership between Central Government and Local Government; and more equitable funding. Our Council's workshop was the first for the Panel, taking place on 28 February.

District Plan Review Update

The review of the District Plan is soon to involve the community. Workshops with Community Boards will take place in March/April and district-wide community consultation in May/June.

9.3 KATIKATI COMMUNITY BOARD GRANT APPLICATION

File Number: A4501822

Author: Pernille Osborne, Senior Governance Advisor - Community Boards

Authoriser: Barbara Whitton, Customer Services and Governance Manager

EXECUTIVE SUMMARY

1. The Katikati Community Board is required to make a decision regarding an application for Community Board Grant Funding. One application has been received.
2. The application and supporting information relating to the Community Board Grant has been forwarded to members, separate to this agenda.

RECOMMENDATION

1. That the Senior Governance Advisor's report dated 30 March 2022, titled 'Katikati Community Board Grant Application', be received.
2. That the Katikati Community Board approve/not approve the Grant Application from the Katikati Community Toy Library for $... to update signage to represent the new logo. This grant will be funded from the Katikati Community Board Grants Account, subject to all accountabilities being met.

BACKGROUND

3. The Katikati Community Board has funding of $8,000 available for disbursement to community organisations for the 2021/2022 financial year. The balance as of 30 March 2022 is $6,000.
4. **Katikati Community Toy Library** has submitted an application for funding of $1,782.50 to contribute to costs relating to the update of signage to represent the new logo.

ENGAGEMENT, CONSULTATION AND COMMUNICATION

Interested/Affected Parties	Completed/Planned Engagement/Consultation/Communication
Katikati Community Toy Library	The applicant will be advised of the outcome of their respective Grant Application.

FUNDING/BUDGET IMPLICATIONS

Budget Funding Information	Relevant Detail
Community Board Grant Funds	The Community Board will consider applications for the distribution of funding, before the end of the financial year. Annual Budget $8,000.00 Current Balance $6,000.00

9.4 INFRASTRUCTURE SERVICES REPORT KATIKATI COMMUNITY BOARD MARCH 2022

File Number: A4491898

Author: Tracy Harris, Executive Assistant

Authoriser: Gary Allis, Deputy Chief Executive & Group Manager Infrastructure Services

EXECUTIVE SUMMARY

This report provides specific information on Infrastructure activities of interest to the Board.

RECOMMENDATION

1. That the Deputy Chief Executive's report dated 30 March 2022, titled 'Infrastructure Services Report Katikati Community Board March 2022', be received.

2. That the Katikati Community Board approve the investigation of options for the following roading and town centre projects:
   Priority 1:

   1) Town Centre Village Footpath Upgrade (Town Centre plan funded)
   2) Diggleman Park - Parking Upgrade
   3) Mulgan Street Footpath Installation
   4) Hyde Street Sealing

   Priority 2:

   5) Kotahi Lane Car Park Sealing
   6) Kotahi Lane (Southern end) Parking Enhancement
   7) Uretara Landing Reserve Enhancement

And that the Roading Engineer West report back to the Board on progress.

ROADING

Transportation - Road Improvements LED Lighting

Description: Council owns and operates 2,500 streetlights on local roads. Close to 100 of these are LED. Installation of LED lights reduces power consumption by 60%. Cost reduction is on the energy charges as line charges are a fixed fee. Waka Kotahi are offering an 85% subsidy to invest in the street light conversion conditional upon it being completed by June 2021. Council has decided to participate in this.

What's Happened:
Works to install LED luminaires in the west and east sections of the District is complete.

What's Next:
Specific lighting design, which is required for "V" category lighting on high volume roads, such as Te Puke Highway and Omokoroa Road, will be considered once the installation of decorative lighting is complete.

The majority of outstanding materials have been delivered. WestLink are currently:

- manufacturing fittings that allow new LED luminaires to be fitted to existing columns, and
- developing a programme for the remaining installations which is anticipated to commence early April.

Transportation - Katikati Community Roading

Description: Develop and implement the community roading plan approved by the Katikati Community Board.

The Board at their recent workshop discussed a number of items and initiatives that could be investigated to implement the town centre plan, to enhance the town centre and to improve the roading and footpath network. The funding sources are the roading budget and the town centre fund. The items that were discussed have been included in the recommendation with two priority levels. The intention is that the investigation and high level concepts and estimates are undertaken prior to progressing to full design and implementation.

The top priority is the main street footpath and kerb and channel upgrading. This is a significant project which requires external design input to ensure that the new footpath enhances Katikati while still being practical and easy to maintain. A review of underground services will also be required so that all are in good condition or installed prior to the new footpath construction. Waka Kotahi will need to be involved with the kerb and channel replacement and upgrading and the pedestrian facilities.

Katikati Community Board Roading Current Account	Project Cost $	NZTA Funding MIP LC/LR $	Katikati Community Board $	Status
Current Account Opening Balance 1 July 2021			**$5,314**	
Allocation for 2021/22			$162,444	
Interest 2022			$175.00	
Subtotal			**$167,933**	
Committed Projects			-	
Nil				
Total Committed Projects			-	
Forecast Current Account Closing Balance 30 June 2022			**$167,933**	

ASSET & CAPITAL

Highfields Stormwater Pond Development Trial

Description: Trial to convert the Highfields Stormwater Pond from a dry pond to a permanent wet pond/lake.

What's Happened:
Groundwater monitoring has been extended for another 12-month period. The outlet to the pond has had further modification to improve how the pond will function. Further maintenance of pond has been undertaken.

What's Next:
Continual monitoring of the pond and the surrounding groundwater and clearing of excess plant growth in the pond. The pod has dried out and the pond design will be need to be progressed.

Western Water Renewals

Description: Renewal and upgrade of water infrastructure.

What's Happened:
Contract has been awarded to Loveridge Ltd to upgrade the water network along Tetley Road. This work will cater for future growth in this area.

What's Next:
Archaeological Authority will be lodged. Construction is due to being in April 2022.

Katikati WWTP Upgrade

Description: Upgrade to the Katikati WWTP to ensure compliance with Council Resource Consent.

What's Happened:
Katikati WWTP has had some ongoing compliance issues. Upgrades are planned to improve the overall performance of the plant and to ensure plant is sized for future growth in Katikati.

What's Next:
Master planning is underway at the plant to ensure capital works improvements are suitable to meet Council requirements.

UTILITIES

Western Solid Waste

Description: Waste management that meets the needs of the community and protects the environment for present and future generations.

WBOP Kerbside Collection Tonnes								
Month	**Jul-21**	**Aug-21**	**Sep-21**	**Oct-21**	**Nov-21**	**Dec-21**	**Jan-22**	**YTD Total**
Refuse	229.32	402.23	376.00	330.41	355.20	392.46	400.06	2,486
Glass	86.30	47.67	135.13	94.46	127.50	147.44	234.56	873
Food waste	37.50	32.68	53.60	57.72	58.50	58.06	64.87	363
Recyclables	113.42	62.18	0.00	120.42	143.16	177.26	154.68	771
Total tonnage	466.54	544.76	564.73	603.01	684.36	775.22	854.17	4,493
Recycling Breakdown								
Month	**Jul-21**	**Aug-21**	**Sep-21**	**Oct-21**	**Nov-21**	**Dec-21**	**Jan-22**	**YTD Total**
Paper	62.49	34.26	0.00	66.35	78.88	97.67	151.08	491
Cardboard	28.01	15.36	0.00	29.74	35.36	43.78	67.72	220
Aluminium	1.36	0.75	0.00	1.45	1.72	2.13	3.29	11
Tin	3.63	1.99	0.00	3.85	4.58	5.67	8.77	29
Plastics Type 1	2.27	1.24	0.00	2.41	2.86	402.10	621.96	1,033
Plastics Type 2	4.31	2.36	0.00	4.58	5.44	6.74	8.41	32

What's Happened:
Kerbside Collection tonnage continues to grow. Plans are being put in place to help navigate through the COVID-19 Omicron outbreak.

Neither the food scraps bin or glass crate will be collected from the following dates after several of Western Bay of Plenty District Council's Kerbside Collective drivers either contracted the virus or are close contacts and are following Ministry of Health advice to self-isolate.

What's Next:
Investigations are underway to further add new properties throughout the District.

Changes to kerbside collections

- Food scraps will not be collected from Thursday 3 March for a number of weeks

- Glass crate will not be collected from Monday 7 March for a number of weeks

RESERVES

Reserves - Cemetery Katikati Hot Springs Road
Description: Develop cemetery to meet demand.

What's Happened
Staff continue to work with Ngai Tamawhariua on planning processes for new Urupa/Cemetery land adjoining Sapphire Springs.

Council's lawyers have provided their advice and a report can now be prepared for Council to consider the statutory process.

What's Next
Complete the report for Council's consideration for the uplifting of the reserve classification of the land, which will be subject to statutory processes to enable the land to be used for urupa/cemetery purposes.

EMERGENCY MANAGEMENT

Description: Support the Katikati Community to be Resilient in the event of an Emergency.

What's Happened:
Started monthly drop in sessions at Katikati Library to be available to the community to discuss personal and household preparedness to further build community resilience.

Attended a meeting with multiple representatives from groups in Katikati to discuss re-establishing a Community Response Team led by the Community Centre, Red Cross, Lions, Rotary and Baptist Church – original community plan has been sent for their review and updates and then work will start on updated Community Guide.

While attending meeting in Katikati visited the Community Centre and met with Katikati Community Connector.
Maintained communication with weather update prior to Cyclone Cody and sent out communications in regard to Covid preparedness updates.

What's Next:
The Team will continue to engage with the Katikati Community Response Team to review their role in an event.

Staff will continue to work and engage with the Community to ensure positive outcomes going forward.

ATTACHMENTS

1. **MAS Katikati Community Board March 2022 PDF**

Action Sheets Report	**Division:**	Infrastructure Services Group	**Printed:** March 2021
	Committee:	Katikati Community Board	

Meeting	Officer/Director	Section	Subject
Katikati Community Board 12 August 2020	**Watson, Peter**	**Reports**	**Haiku Park – Develop Leased Area between Haiku Reserve, Donegal Place and Henry Road Cycle Trail** (Infrastructure Services Report Katikati Community Board August 2020)

Haiku Park – Develop Leased Area between Haiku Reserve, Donegal Place and Henry Road Cycle Trail

Councillor Henry advised the Board that the Reserves and Facilities Manager would consult with residents in the street and owners of the houses whose fences are affected.

March 2022:
Subject to Covid -19 requirements, staff would like to attend the next Community Board workshop to present the draft plan and seek feedback.

January 2022:
A draft plan has been received and is being reviewed by staff before presenting the plan to the Community Board, tangata whenua and other interested parties.

November 2021:
The concept plan is being managed by an external consultant due to current Reserves and Facilities project workload. The delivery of the draft plan is being rescheduled to the New Year at which time we plan to present a copy to the Board for feedback.

August 2021:
Projects are being rescheduled due to the recent Covid-19 lockdown.

July 2021:
Staff have received fee back from Tangata Whenua to input to the draft concept plan. A draft concept plan is expected to be ready for Board and stakeholder feedback by October 2021.

May 2021:
Staff note that the Board have requested a copy of the concept plan for the site.
Staff have recently met with Tangata Whenua to seek their input to the Concept Plan. A copy of the "draft" concept plan will be provided to the Board once it has been prepared.

Action Sheets Report	**Division:**	Infrastructure Services Group	**Printed:** March 2021
	Committee:	Katikati Community Board	

March 2021:
Initial engagement with Tangata Whenua has been undertaken. Engagement with other community groups is planned. In the meantime, the site will be mowed with a flail mower where this is achievable.

January 2021:
Council have completed a basic concept plan for discussion with the surrounding property owners. Staff will advise the adjoining property owners and the programme works.

November 2020:
The preliminary engagement is planned to take place in January/February 2021.

September 2020:
Haiku Park - Develop Leased Area between Haiku Reserve, Donegal Place and Henry Road Cycle Trail:.

Due to other project workload, the concept plan implementation has been delayed until Autumn 2021, subject to project funds being approved.

In the meantime, staff intend on undertaking some preliminary engagement with Tangata Whenua, the Estuary Managers and Katikati Taio as part of the development of a draft concept plan for Donegal Place Reserve (also known as the Mills Block).

The adjoining property owners will be involved in the preliminary engagement process.

A 'Draft' concept plan will be prepared based upon the preliminary feedback, before seeking wider public feedback.

Action Sheets Report	**Division:**	Infrastructure Services Group	**Printed:** March 2021
	Committee:	Katikati Community Board	

Meeting	Officer/Director	Section	Subject
Katikati Community Board 10/11/2021	**Hall, Ashley**	**New Item**	**Paula Gaelic - Various Items**

Ms Gaelic was in attendance to speak to the below items.

1. Ms Gaelic requested the Cherry Trees by the museum carpark be removed. It was noted that the droppings from the trees were causing problems for car owners who parked underneath. It was also noted that, if the trees were removed, there could be an opportunity to create additional carparks.
2. Ms Gaelic also spoke to report 9.3 '33 Middlebrook Drive', outlining the process of the project to the Board. The Community Board would need to formalise a decision (which was included in the agenda) before it was recommended to Council.

The Board sought advice from the Roading Engineer (West) and noted that the Cherry Tree issue could be looked at through the Town Centre Plan, and clarified that it was not an issue that could be addressed in 2021.

March 2022:
The parking enhancement request is currently being considered by the Board and has been added to the roading account priority list, which is at date, yet to be resolved.

January 2022:
The Roading Engineer noted that a number of the cherry trees were subject to removal by the previous Board.

There is ample parking facilities in the Kotahi Lane car park.

A few of the trees are located within the Cherry Court private property. Approval will be required to remove these particular trees.

Roading Engineer is awaiting guidance from the Board on which trees would be felled, if any.

It was noted at the Board meeting that an update on 33 Middlebrook Drive was an agenda item and was addressed accordingly.

Action Sheets Report	**Division:**	Infrastructure Services Group	**Printed:** March 2021
	Committee:	Katikati Community Board	

Meeting	Officer/Director	Section	Subject
Katikati Community Board 10/11/2021	**Hall, Ashley**	**New Item**	**Roading Budget Projects**

The Board requested a 'walking workshop' with the Roading Engineer (West) to discuss potential roading projects.

March 2022:
The Roading Engineer has attending two sitting workshops on Monday, 28 February and Monday, 7 March 2022, this has negated the need for a Board level walking workshop.

The Roading Engineer has stated on numerous occasions that he is open to meet any member or the entire Board at any time at a mutual time.

January 2022:
The Roading Engineer can make himself available at the Board's request for a walking workshop.

Action Sheets Report	**Division:**	Infrastructure Services Group	**Printed:** March 2021
	Committee:	Katikati Community Board	

Meeting	Officer/Director	Section	Subject
Katikati Community Board 2/02/2022	**Watson, Peter**	**New Item**	**Reserve Management Plan**
The Board requested a report on the Levels of Service for the parks and reserves within Katikati.			
March 2022: Staff will prepare a report on the levels of service applicable to the Katikati township.			

Action Sheets Report	**Division:**	Infrastructure Services Group	**Printed:** March 2021
	Committee:	Katikati Community Board	

Meeting	Officer/Director	Section	Subject
Katikati Community Board 2/02/2022	**Williams, Blaise**	**Reports**	**Council Decision on Katikati Community Board Recommendation - 33 Middlebrook Drive**

The Board considered a report from the Senior Governance Advisor. The report was taken as read, with further clarification sought on the below items:

- Whether or not the immediate neighbours to 33 Middlebrook Drive had been consulted with.
- Whether or not the immediate neighbours to the Housing New Zealand development on Middlebrook Drive had been informed of the social housing and affordable housing that would occupy that land.

The Chief Executive Officer responded to questions as follows:

- Staff would follow up to ensure that consultation with appropriate neighbours of 33 Middlebrook Drive was undertaken if it had not already happened.
- Housing New Zealand, as owner of the land, would be responsible for consulting with immediate neighbours.

The Board expressed concern over the possibility of the Housing New Zealand development being social housing, as opposed to affordable housing. If the housing was going to be social housing, the Board expressed strongly that there should be community consultation.

The Board requested a report from Council regarding the consultation process for current community developments within Katikati.

March 2022:

This property has been sold to Kāinga Ora and a recent press release from Minister Woods highlighted that the property would be used for a mix of housing including affordable housing for sale and social housing for retention by Kāinga Ora. The properties for sale would be closest to Middlebrook Drive. The property is zoned residential and can be developed as such, by right.

Staff have asked Kāinga Ora to set up a communications plan for adjoining neighbours to keep them informed as the project proceeds.

Neighbours of 33 Middlebrook (the community HUB location) would have seen the advertised call for interested community groups to apply for the location. Once co-ordination, facilitation and funding for buildings on the site are aligned, adjacent neighbours will be communicated with.

This is a similar communications plan to the engagement that is currently occurring on the Beach Road pensioner housing development where a number of communications have already occurred with the neighbours.

Action Sheets Report	Division:	Infrastructure Services Group	Printed: March 2021
	Committee:	Katikati Community Board	

Meeting	Officer/Director	Section	Subject
Katikati Community Board 10/11/2021	**Cave, Alison**	**New Item**	**CCTV Applications**

The Board requested to view the CCTV camera applications for Katikati to see if there were any that the Board could help contribute funding towards. The Board had been asked by Councils CCTV working party to contribute 50% of the cost for a CCTV camera on the Corner of State Highway 2 and Tetley Road, Katikati. The Board passed a formal resolution to part fund the requested camera.

March 2022:

The CCTV installation at the intersection of Tetley and SH2 is on hold pending completion of the SH safety improvement traffic circle planned for this intersection. Conduiting for the proposed camera as been requested to be included in these works.

January 2022:

Below is a summary of the locations where CCTV cameras were requested in the Katikati area through the CCTV Application process., Katikati CCTV Applications.

- Intersection of SH2 and Tetley Road (confirmed - installation to be funded in 50/50 partnership with KKCB)
- Beach Road and Park Road intersection
- Main Road / Jocelyn Street
- Moore Park
- Morton Road Bus Shelter and Tennis Courts
- Pukakura Road / Beach Road
- Beach Road / Park Road intersection
- Beach Road Boat Ramp and Toilets
- Dave Hume carpark
- Fairview Road / Carisbrook Street intersection
- SH 2 / Kauri Point Road
- SH 2 / Tanners Point Road
- SH 2 / Tuapiro Road (confirmed installation to be funded by WBOPDC Compliance team with an additional camera being installed at Tuapiro Reserve funded by Reserves and Facilities)
- SH 2 / Busby Road
- Sharp Road / SH2

Action Sheets Report	**Division:**	Infrastructure Services Group	**Printed:** March 2021
	Committee:	Katikati Community Board	

Please be aware that the above applications have been declined by the CCTV Working Party due to budgetary constraints and the Katikati Community Board would have to apply to Council to fund any additional cameras. Also, Council would need to approve acceptance of the ongoing maintenance and depreciation costs for any additional CCTV cameras.

9.5 KATIKATI FINANCIAL REPORT - FEBRUARY 2022

File Number: A4510619

Author: Ezelle Thiart, Financial Business Advisor

Authoriser: Sarah Bedford, Financial Controller

EXECUTIVE SUMMARY

This report provides the Community Board with a two-monthly monitoring of its operational budget. Attached are the financial statements for the two months ended 28 February 2022 **(Attachment 1)**.

Total operational costs are under budget YTD.

RECOMMENDATION

That the Financial Business Advisor's report dated 30 March 2022, titled 'Financial Report Katikati – February 2022', be received.

Grant payments made to date:

Resolution	Description	$
K22-1.7	Grant for Road Safety Education – received by Katikati College	2,000
2021/22 Grants		**2,000**

C.E. Miller Estate Reserve:

Description	$
2021/22 Opening balance	14,888
No transactions to date	0
2021/22 Closing balance	**14,888**

Committed – Operational Expenditure

Resolution	Account	Description	$
K22-1.6	Contingency	ANZAC Day wreath	200
Total outstanding operational commitments			**200**

2021/22 Reserve Analysis:

Description	**$**
2021/22 Opening balance	53,858
No transactions to date.	0
2021/22 Closing balance	**53,858**

Committed - Reserve Expenditure

Resolution	**Description**	**$**
	Opening balance before committed expenditure	53,858
K21-5.6	Installation CCTV camera Cnr SH2 & Tetley Rd, Katikati	(5,000)
2021/22 Closing balance after committed expenditure		**48,858**

ATTACHMENTS

1. **Financial Report Katikati - February 2022**

Western Bay of Plenty District Council
Income and Expenditure Statement
For the period ended 29 February 2022

Katikati Community Board

	Year to Date				Full Year	Last Year
	Actual $	Budget $	Variance (Unfav)/Fav $		Budget $	Actual $
Direct Costs						
Additional Levels of Service	0	0	0	☑	0	0
Conference Expenses	0	1,336	1,336	☑	2,000	0
Contingency - [see breakdown below]	0	1,336	1,336	☑	2,000	472
Grants	2,000	5,336	3,336	☑	8,000	6,996
Mileage Allowance	0	1,336	1,336	☑	2,000	0
Salaries	18,362	18,712	350	☑	28,070	27,455
Security	(4,198)	4,336	8,534	☑	6,500	7,579
Street Decoration	0	3,000	3,000	☑	4,500	0
Inter Department Charges	26,112	26,112	0	☑	39,169	39,168
Total Operating Costs	**42,277**	**61,504**	**19,227**	☑	**92,239**	**81,726**
Interest Expense	0	0	0	☑	0	0
Depreciation	0	0	0	☑	0	0
Total Direct Costs	**42,277**	**61,504**	**19,227**	☑	**92,239**	**81,726**
Costs Allocated	0	0	0	☑	0	0
Costs Recovered	0	0	0	☑	0	0
Total Costs	**42,277**	**61,504**	**19,227**	☑	**92,239**	**81,726**
Income						
Financial Contributions	0	0	0	☑	0	0
Interest Received	0	0	0	☑	0	0
Other Income	0	0	0	☑	0	0
Rate Income	67,375	66,832	543	☑	100,239	93,843
Service Charges	0	0	0	☑	0	0
Subsidies & Grants	0	0	0	☑	0	0
User Fees	0	0	0	☑	0	0
Total Direct Income	**67,375**	**66,832**	**543**	☑	**100,239**	**93,843**
Net Cost of Service	**25,099**	**5,328**	**19,771**	☑	**8,000**	**12,117**

Contingency - breakdown

No transactions to date

Year to date contingency costs **0**

☑ ***Favourable Variance***

⊗ ***Non Favourable Varience***

Community Board Reserves

Opening Balance - Surplus (Deficit)	**53,858**
No transactions to date	
(Decrease) Increase in year	**0**
Closing Balance - Surplus (Deficit)	**53,858**

Town Centre Development Reserves

Opening Balance - Surplus (Deficit)	**447,040**
No transactions to date	0
(Decrease) Increase in year	**0**
Closing Balance - Surplus (Deficit)	**447,040**

CE Miller Estate Restricted Reserves

Opening Balance - Surplus (Deficit)	**14,888**
No transactions to date	0
(Decrease) Increase in year	**0**
Closing Balance - Surplus (Deficit)	**14,888**

Please note the credit balance in Security is a refund for Tarnix Security invoice paid twice.

9.6 COUNCIL, STANDING COMMITTEES AND COMMUNITY BOARD MEETINGS

File Number: A4509253

Author: Pernille Osborne, Senior Governance Advisor – Board Secretary

Authoriser: Barbara Whitton, Customer Services and Governance Manager

RECOMMENDATION

That the schedule of meetings for April, May and June 2022, be received.

ATTACHMENTS

1. **Meeting Dates for Community Board Agendas - April**

Western Bay of Plenty District Council
Meeting Schedule 2022

APRIL 2022			
Meeting	**Date**	**Time**	**Venue**
Kaituna Catchment Control Scheme Advisor Group	4 Apr	10.00am	BOPRC Rotorua Office
Policy Committee	5 Apr	9.30am	Chambers or via Zoom
Policy Workshop	5 Apr	1.00pm	Chambers or via Zoom
Ōmokoroa Community Board	5 Apr	7.00pm	Ōmokoroa Library & Service Centre and/or Via Zoom
Council	6 Apr	9.30am	Chambers or via Zoom
Te Puke Community Board	7 Apr	7.00pm	Te Puke Library & Service Centre and/or Via Zoom
District Licensing Committee Hearing	8 Apr	9.30am	Zoom
Maketu Community Board	12 Apr	7.00pm	Maketu Community Centre and/or Via Zoom
Good Friday – 15 April			
Easter Monday – 18 April			
Waihī Beach Community Board	19 Apr	6.30pm	Waihī Beach Community Centre and/or via Zoom
Regulatory Hearings Committee (if required)	20 Apr	9.30am	Chambers or via Zoom
District Plan Committee (if required)	21 Apr	9.30am	Chambers or via Zoom
ANZAC Day - 25 April			
Te Kāhui Mana Whenua o Tauranga Moana	27 Apr	10.00am	Chambers or via Zoom
MAY 2022			
Meeting	**Date**	**Time**	**Venue**
Policy Committee	3 May	9.30am	Chambers or via Zoom

Policy Workshop	3 May	1.00pm	Chambers or via Zoom
Annual Plan/Long Term Plan Committee Workshop	4 May	9.30am	Chambers or via Zoom or via Zoom
Performance and Monitoring Committee	5 May	9.30am	Chambers
Regional/Public Transport Subcommittee Hearings	11 May	9.30am	BOPRC Chambers
Te Ihu o te Waka o Te Arawa	11 May	10.00am	Chambers or via Zoom
Council	12 May	9.30am	Chambers or via Zoom
Regional/Public Transport Subcommittee Hearings	13 May	9.30am	TBC
Waiāri Kaitiaki Advisory Group	18 May	TBC	TCC Chambers
Regional Transport Committee	19 May	9.30am	BOPRC Chambers
Policy Workshop	24 May	9.30am	Chambers or via Zoom
Annual Plan/Long Term Plan Workshop	24 May	1.00pm	Chambers or via Zoom
District Plan Committee (if required)	25 May	9.30am	TBC
Katikati Community Board	25 May	7.00pm	The Centre. Pātuki Manawa, or via Zoom
District Plan Committee (if required)	26 May	9.30am	TBC
Regional/Public Transport Subcommittee Hearings	30 May	9.30am	BOPRC Chambers
Ōmokoroa Community Board	31 May	7.00pm	Ōmokoroa Library & Service Centre and/or Via Zoom
JUNE 2022			
Meeting	**Date**	**Time**	**Venue**
Audit & Risk Committee	2 Jun	9.30am	Chambers or via Zoom
Te Puke Community Board	2 Jun	7.00pm	Te Puke Library & Service Centre and/or Via Zoom
Queen's Birthday – 6 June			
Maketu Community Board	7 Jun	7.00pm	Maketu Community Centre and/or Via Zoom

BOP Mayoral Forum	8 Jun	9.30am	BOPRC Chambers
Annual Plan/Long Term Plan Committee	9 Jun	9.30am	Chambers or via Zoom
Waihī Beach Community Board	13 Jun	6.30pm	Waihī Beach Community Centre and/or via Zoom
SmartGrowth Leadership Group	14 Jun	8.30am	TCC Chambers
Policy Committee	14 Jun	9.30am	Chambers or via Zoom
Policy Workshop	14 Jun	1.00pm	Chambers or via Zoom
Tauranga Moana Advisory Group	17 Jun	9.30am	TCC Chambers
Katikati-Waihī Beach Ward Forum	21 Jun	7.00pm	TBC
Annual Plan/Long Term Plan Committee	22 Jun	9.30am	Chambers or via Zoom
District Plan Committee (if required)	23 Jun	9.30am	TBC
Public Transport Committee	23 Jun	9.30am	BOPRC Chambers
Matariki Day – 24 June			
Council	29 Jun	9.30am	Chambers or via Zoom
Policy Workshop	29 Jun	1.00pm	Chambers or via Zoom
Kaimai Ward Forum	30 Jun	7.00pm	TBC

Please note that these meetings are subject to change